Product Approval
USER: Public User

FL #	FL47213
Application Type	New
Code Version	2023
Application Status	Approved
Comments	
Archived	☐
Product Manufacturer	Eco Window Systems
Address/Phone/Email	8502 NW 80th Street Suite 103 Medley, FL 33166 (305) 885-5299 carlos.martinez@ecowindowsystems.com
Authorized Signature	Carlos Martinez carlos.martinez@ecowindowsystems.com
Technical Representative Address/Phone/Email	
Quality Assurance Representative Address/Phone/Email	
Category	Windows
Subcategory	Single Hung
Compliance Method	Evaluation Report from a Florida Registered Architect or a Licensed Florida Professional Engineer ☐ Evaluation Report - Hardcopy Received
Florida Engineer or Architect Name who developed the Evaluation Report	Javad Ahmad
Florida License	PE-70592
Quality Assurance Entity	Keystone Certifications, Inc.
Quality Assurance Contract Expiration Date	12/31/2032
Validated By	Ammad Riaz, P.E. ☑ Validation Checklist - Hardcopy Received
Certificate of Independence	FL47213_R0_COI_Certificate_of_Independence_JA-PE.pdf

Referenced Standard and Year (of Standard)

Standard	Year
TAS 201	1994
TAS 202	1994
TAS 203	1994

Equivalence of Product Standards Certified By

Sections from the Code

Product Approval Method	Method 1 Option D
Date Submitted	12/20/2024
Date Validated	12/20/2024
Date Pending FBC Approval	12/22/2024
Date Approved	02/11/2025

Summary of Products

FL #	Model, Number or Name	Description
47213.1	ECO-NOVO Series 175 Single Hung Window System	Large and Small Missile Impact Resistant Single Hung Window System
Limits of Use **Approved for use in HVHZ:** Yes **Approved for use outside HVHZ:** Yes **Impact Resistant:** Yes **Design Pressure:** +70/-70 **Other:** Please see enclosed documents for product performance information, anchorage details, anchor type, maximum sizes and spacing information.		**Installation Instructions** FL47213_R0_II_ECO-NOVO_SERIES_175_SINGLE_HUNG_WINDOW-JA-2042-24.pdf Verified By: Javad Ahmad PE-70592 Created by Independent Third Party: Yes **Evaluation Reports** FL47213_R0_AE_ECO-NOVO_Series_175_Single_Hung_Window-PA_EVR.pdf Created by Independent Third Party: Yes

Back Next

Contact Us :: 2601 Blair Stone Road, Tallahassee FL 32399 Phone: 850-487-1824

The State of Florida is an AA/EEO employer. Copyright 2007-2013 State of Florida. :: Privacy Statement :: Accessibility Statement :: Refund Statement

Under Florida law, email addresses are public records. If you do not want your e-mail address released in response to a public-records request, do not send electronic mail to this entity. Instead, contact the office by phone or by traditional mail. If you have any questions, please contact 850.487.1395. *Pursuant to Section 455.275(1), Florida Statutes, effective October 1, 2012, licensees licensed under Chapter 455, F.S. must provide the Department with an email address if they have one. The emails provided may be used for official communication with the licensee. However email addresses are public record. If you do not wish to supply a personal address, please provide the Department with an email address which can be made available to the public. To determine if you are a licensee under Chapter 455, F.S., please click here .

Product Approval Accepts:

Credit Card Safe securityMETRICS

ECO WINDOW SYSTEMS, LLC
ECO-NOVO SERIES: 175 SINGLE HUNG WINDOW SYSTEM
(LARGE AND SMALL MISSILE IMPACT RATED)

FL# 47213

SHEET INDEX

101	COVER PAGE
102	TYPICAL ELEVATIONS
103	SECTIONAL DETAILS- HORIZONTAL
104	SECTIONAL DETAILS- VERTICAL
105	GLAZING DETAIL & LOADING CHART
106	ANCHOR LAYOUT
107	TYPICAL ANCHORAGE DETAILS
108	PARTS LIST
109	CORNER ASSEMBLY DETAIL

NOTE:

- THIS PRODUCT APPROVAL DRAWING IS A TABULATED PERFORMANCE ANALYSIS OF THE INDIVIDUAL COMPONENTS AND DOES NOT CONTAIN INFORMATION ON EACH PROJECT SITE SPECIFIC CONDITION.
- STRUCTURAL, WATERPROOFING, SEALING, GUARD, AESTHETICS AND/OR OTHER MISCELLANEOUS REQUIREMENTS MUST BE COORDINATED AND APPROVED BY THE AUTHORITY HAVING JURISDICTION
- FOR SITE-SPECIFIC CONDITIONS WHERE THE DESIGN PRESSURE / PRODUCT SIZE EXCEEDS THE VALUES SHOWN IN THIS DOCUMENT, CONTACT ECO WINDOW SYSTEM, LLC FOR SPECIAL APPROVALS THROUGH THEIR OFFICIAL MAIL **carlos.martinez@ecowindowsystems.com** / CONTACT DETAILS PROVIDED ON THE RIGHT SIDE OF THIS SHEET.

NOTE:

- THIS PRODUCT APPROVAL APPLIES TO SINGLE UNITS OR SIDE BY SIDE COMBINATIONS OF S.H./S.H. OR SINGLE HUNG WITH OTHER WINDOW TYPES IN MODULES OF TWO OR MORE WINDOWS USING F.B.C. APPROVED MULLIONS IN BETWEEN.
- LOWER DESIGN PRESSURE FROM WINDOWS OR MULLION APPROVAL WILL APPLY TO ENTIRE SYSTEM.

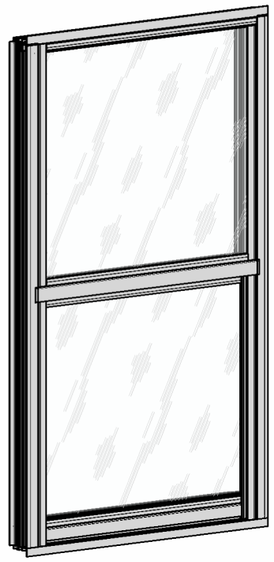

EQUAL LITE CONFIGURATION

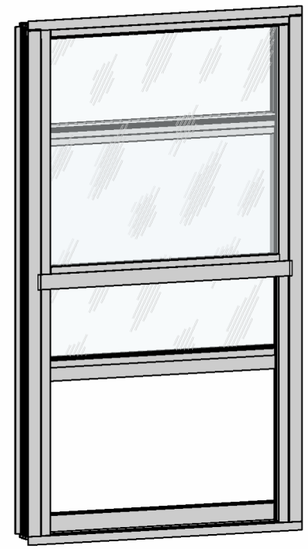

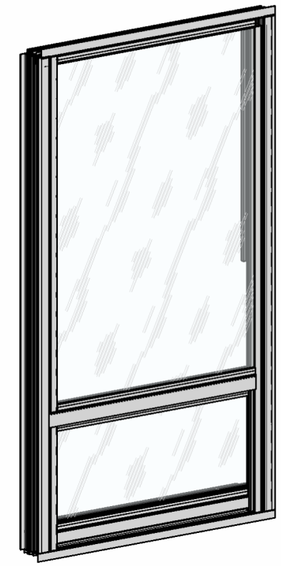

UNEQUAL LITE CONFIGURATION

GENERAL NOTES:

1. THIS PRODUCT HAS BEEN DESIGNED AND TESTED TO COMPLY WITH THE REQUIREMENTS OF THE 2023 (8 TH EDITION) FLORIDA BUILDING CODE INCLUDING HIGH VELOCITY HURRICANE ZONE (HVHZ).
2. GLASS CAPACITIES FOUND IN THE CHARTS HEREIN THIS CERTIFICATION ARE BASED ON ASTM E1300-16 (3 SEC. GUSTS).
3. ALL DESIGN PRESSURES NOTED HEREIN ARE 'ALLOWABLE STRESS DESIGN' (ASD) PRESSURES BASED ON MAXIMUM TESTED PRESSURES DIVIDED BY A 1.5 SAFETY FACTOR.
4. 1BY OR 2BY WOOD BUCKS & BUCK FASTENERS BY OTHERS, MUST BE DESIGNED AND INSTALLED ADEQUATELY TO TRANSFER APPLIED PRODUCT LOADS TO THE BUILDING STRUCTURE.
5. ANCHORS SHALL BE CORROSION RESISTANT, SPACED AS SHOWN ON DETAILS AND INSTALLED PER MANUF'S INSTRUCTIONS. SPECIFIED EMBEDMENT TO BASE MATERIAL SHALL BE BEYOND WALL DRESSING OR STUCCO.
6. GAURD REQUIREMENTS SHALL BE REVIEWED ON A SITE-SPECIFIC BASIS.
7. NO FACTORS HAVE BEEN USED IN ALLOWABLE STRESS CAPACITY OF THE PRODUCT. ANCHORS FOR WOODEN SUBSTRATE HAVE BEEN PROVIDED USING LOAD DURATION FACTOR OF Cd=1.6.
8. ALL SHIMS TO BE HIGH IMPACT, NON-METALLIC AND NON-COMPRESSIBLE.
9. MATERIALS INCLUDING BUT NOT LIMITED TO STEEL/METAL SCREWS, THAT COME INTO CONTACT WITH OTHER DISSIMILAR MATERIALS SHALL MEET THE REQUIREMENTS OF THE 2023 FLORIDA BLDG. CODE & ADOPTED STANDARDS.
10. THIS PRODUCT APPROVAL IS GENERIC AND DOES NOT PROVIDE INFORMATION FOR A SITE SPECIFIC PROJECT, i.e. LIFE SAFETY OF THIS PRODUCT, ADEQUACY OF STRUCTURE RECEIVING THIS PRODUCT AND SEALING AROUND OPENING FOR WATER INFILTRATION RESISTANCE ETC.
11. CONDITIONS NOT SHOWN IN THIS DRAWING ARE TO BE ANALYZED SEPARATELY, AND TO BE REVIEWED BY BUILDING OFFICIAL.
12. CONTRACTOR TO BE RESPONSIBLE FOR THE SELECTION, PURCHASE AND INSTALLATION OF THIS PRODUCT BASED ON THIS PRODUCT EVALUATION PROVIDED HE/SHE DOES NOT DEVIATE FROM THE CONDITIONS DETAILED ON THIS DOCUMENT.
13. THIS PRODUCT EVALUATION DOCUMENT WILL BE CONSIDERED INVALID IF ALTERED BY ANY MEANS.
14. SITE SPECIFIC PROJECTS SHALL BE PREPARED BY A FLORIDA REGISTERED ENGINEER OR ARCHITECT WHICH WILL BECOME THE ENGINEER OF RECORD (E.O.R.) FOR THE PROJECT AND WHO WILL BE RESPONSIBLE FOR THE PROPER USE OF THE P.E.D. ENGINEER OF RECORD, ACTING AS A DELEGATED ENGINEER TO THE P.E.D. ENGINEER SHALL SUBMIT TO THIS LATTER THE SITE SPECIFIC DRAWINGS FOR REVIEW.
15. THIS P.E.D. SHALL BEAR THE DATE AND ORIGINAL SEAL AND SIGNATURE OF THE PROFESSIONAL ENGINEER OF RECORD THAT PREPARED IT.
16. ENSURE A COMPREHENSIVE REVIEW OF THE NOTES ON EACH SHEET TO AVOID ANY POTENTIAL PROBLEM IN UTILIZING THIS APPROVAL.
17. MATERIALS INCLUDING BUT NOT LIMITED TO STEEL/METAL SCREWS, THAT COME INTO CONTACT WITH OTHER DISSIMILAR MATERIALS SHALL MEET THE REQUIREMENTS OF THE 2023 FLORIDA BLDG. CODE & ADOPTED STANDARDS.
18. FASTENERS DESCRIBED IN THIS CERTIFICATION ARE PERMITTED TO BE SUBSTITUTED, PROVIDED THAT STRENGTH OF THE ALTERNATIVE ANCHOR IS EQUAL TO OR GREATER THAN THE ORIGINALLY SPECIFIED ANCHOR. FINAL APPROVAL OF SUBSTITUTED ANCHORS SHALL BE BY OTHERS.
19. WOOD SCREWS REFERENCED IN THIS CERTIFICATION SHALL BE GRADE 2 MIN. (Fu = 74,000 PSI).
20. FASTENERS SHALL BE CADMIUM PLATED OR OTHERWISE CORROSION-RESISTANT MATERIAL AND SHALL COMPLY WITH "SPECIFICATIONS FOR ALUMINUM STRUCTURES" SECTION J.3 OF THE CURRENT CODE BY THE ALUMINUM ASSOCIATION, INC., & ANY APPLICABLE FEDERAL, STATE, AND/OR LOCAL CODES.
21. ALTERATIONS, ADDITIONS, OR OTHER MARKINGS TO THIS DOCUMENT ARE NOT PERMITTED AND INVALIDATE THIS CERTIFICATION.
22. SAFEGUARDS MUST BE OBSERVED (NOT PART OF THIS CERTIFICATION).

INSTRUCTIONS: **(CLICK ON THE BUTTON ON THE RIGHT TO DIRECTLY REACH THE DETAIL)**

STEP 1 - WIND PRESSURE CALCULATION (BY OTHERS)-
DETERMINE DESIGN WIND LOAD REQUIREMENT BASED ON WIND VELOCITY, BLDG. HEIGHT, WIND ZONE USING APPLICABLE ASCE 7 STANDARD.

STEP 2 SIZE AND CAPACITY SELECTION
SEE THE LOADING CHART ON SHEET **105** FOR DESIGN LOAD CAPACITY OF DESIRED WINDOW SIZE. THIS VALUE SHOULD MEET OR EXCEED THE DESIGN WIND LOAD REQUIREMENT OBTAINED IN STEP 1 ABOVE. CLICK HERE

STEP 3 ANCHOR SELECTION
- SELECT APPROPRIATE ANCHOR FROM SHEET **106**. CLICK HERE
- ANCHORAGE DETAILS- FOR VARIOUS SUBSTRATES- SEE SHEET **103, 104** AND **107.** CLICK HERE

THIS SYSTEM IS APPROVED FOR INSTALLATION WHERE WATER INFILTRATION RESISTANCE IS REQUIRED.

THIS SYSTEM IS RATED FOR LARGE & SMALL MISSILE IMPACT.

JAVAD AHMAD PE, inc
7875 NW 12th St., Suite 102
Doral, FL 33126
Ph: (305) 424-8001
support@ja-pe.com
CONSULTING • STRUCTURAL DESIGN • FACADES • BUILDING ENVELOPE • SYSTEM DESIGN • PRODUCT APPROVALS

drawing no.	JA-2042-24	drawn by:	BS
date:	12-19-24	check by:	SA

REVISION

No.	DATE	BY	DESCRIPTION

ECO-NOVO SERIES: 175 SINGLE HUNG WINDOW SYSTEM
(LARGE AND SMALL MISSILE IMPACT RATED)

ECO window systems
ECO WINDOW SYSTEMS, LLC.
8502 N.W. 80th ST. MEDLEY, FL 33166
TEL. (305) 885-5299 FAX. (305) 885-5902

JAVAD AHMAD LICENSE No 70592 STATE OF FLORIDA PROFESSIONAL ENGINEER

SEALED: 12/19/2024

TYPICAL ELEVATIONS

FL# 47213

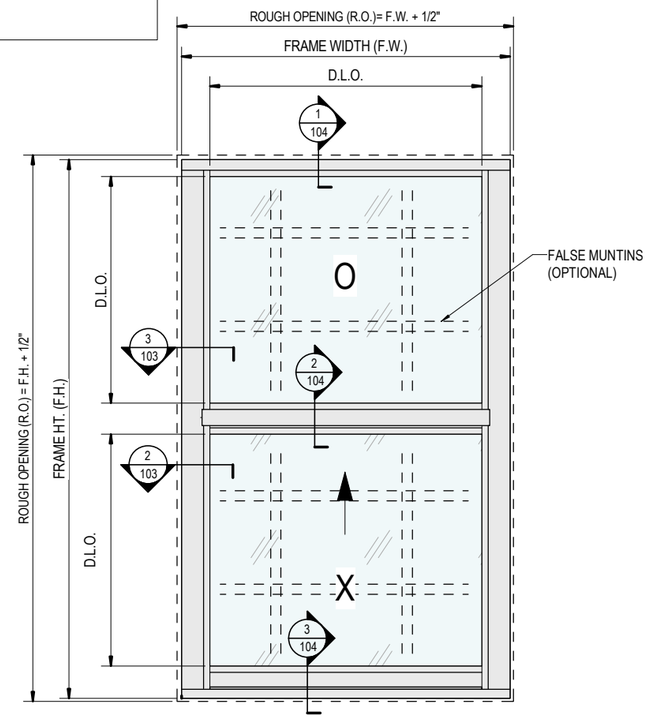

1 / 102 **EQUAL LITES TYPICAL WINDOW ELEVATION**
NOT TO SCALE

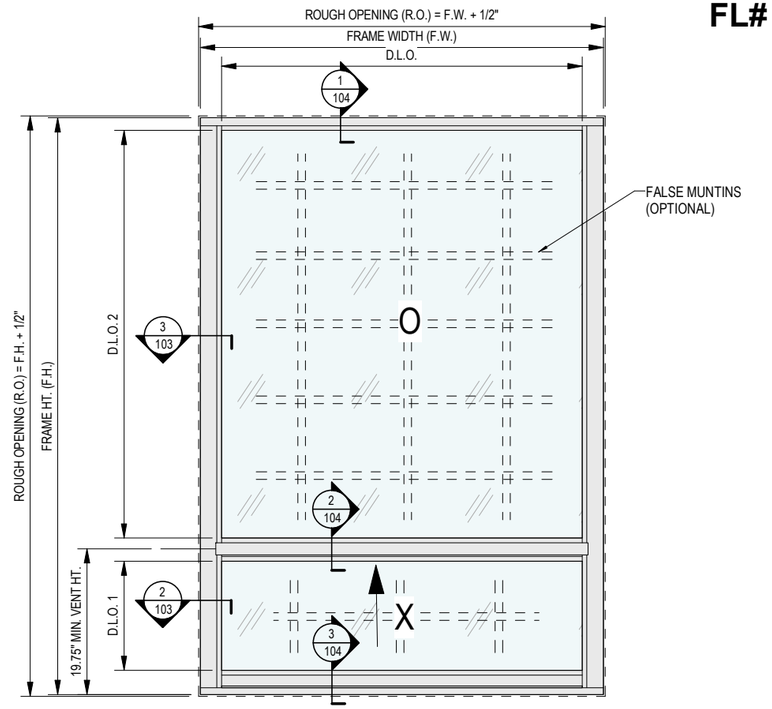

2 / 102 **UNEQUAL LITES TYPICAL WINDOW ELEVATION**
NOT TO SCALE

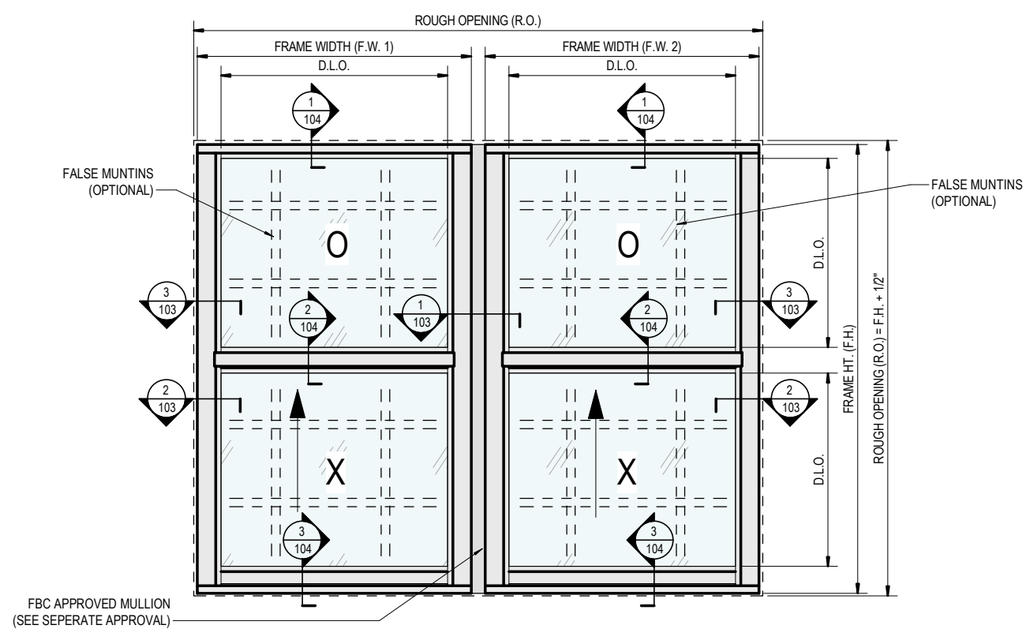

NOTE: F.W. FOR DESIGN PRESSURE = MAX OF (F.W.1 OR F.W.2)

3 / 102 **SIDE BY SIDE TYPICAL WINDOW ELEVATION**
NOT TO SCALE

NOTE:

FOR ALLOWABLE DESIGN PRESSURES, SEE SHEET 105.

JAVAD AHMAD PE, inc
7875 NW 12th St., Suite 102
Doral, FL 33126
Ph: (305) 424-8001
support@ja-pe.com
CONSULTING • STRUCTURAL DESIGN • FACADES • BUILDING ENVELOPE • SYSTEM DESIGN • PRODUCT APPROVALS

drawing no. JA-2042-24 drawn by: BS
date: 12-19-24 check by: SA

REVISION

No.	DATE	BY	DESCRIPTION

ECO-NOVO SERIES: 175 SINGLE HUNG WINDOW SYSTEM
(LARGE AND SMALL MISSILE IMPACT RATED)

ECO WINDOW SYSTEMS, LLC.
8502 N.W. 80th ST. MEDLEY, FL 33166
TEL. (305) 885-5299 FAX. (305) 885-5902

JAVAD AHMAD LICENSE No 70592 STATE OF FLORIDA PROFESSIONAL ENGINEER

SEALED: 12/19/2024

SECTIONAL DETAILS- HORIZONTAL

NOTE: SEE SHEET 106 FOR ANCHOR SPACING

FL# 47213

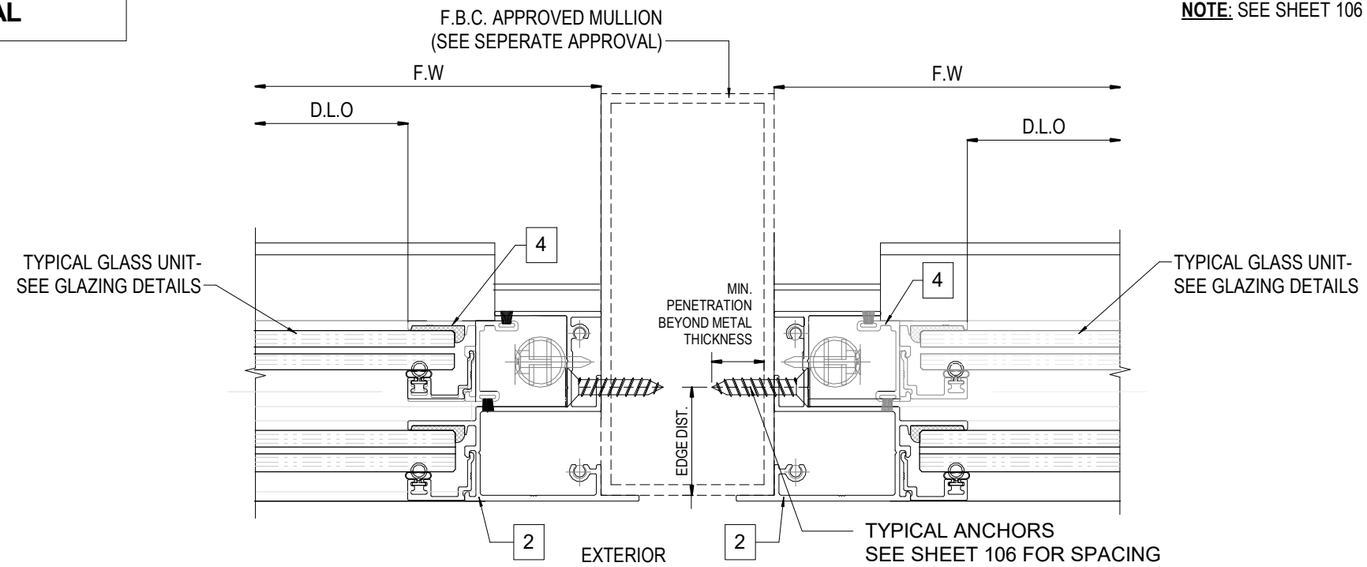

1 / 103 **TYPICAL JAMB DETAIL - SIDE BY SIDE WINDOWS**

NOT TO SCALE

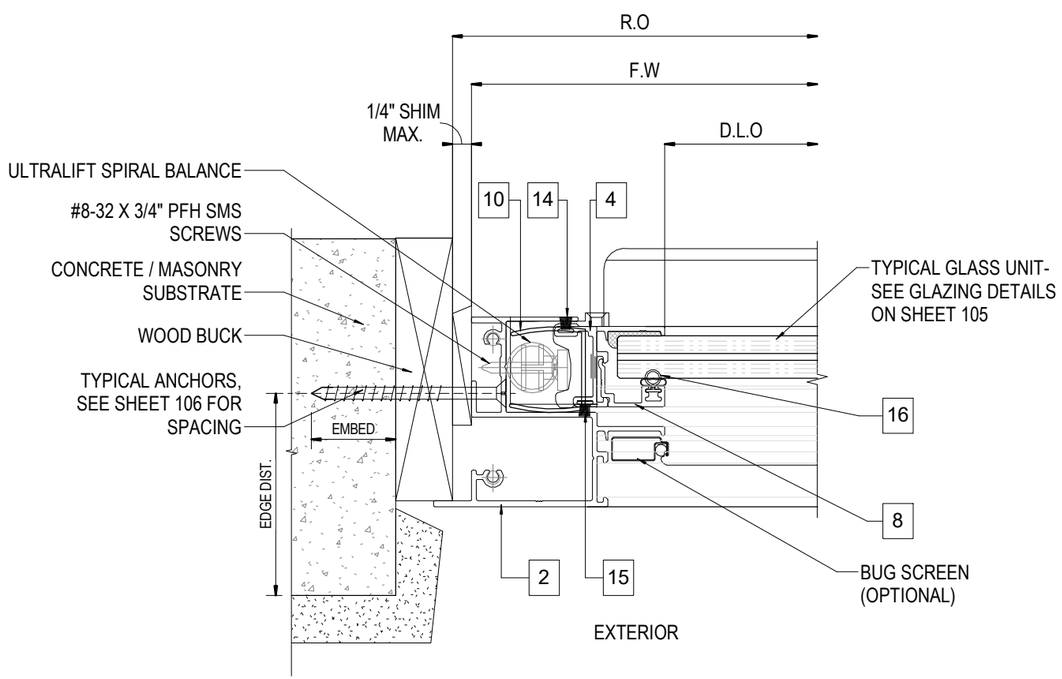

2 / 103 **TYPICAL JAMB DETAIL - LOWER VENT**

NOT TO SCALE

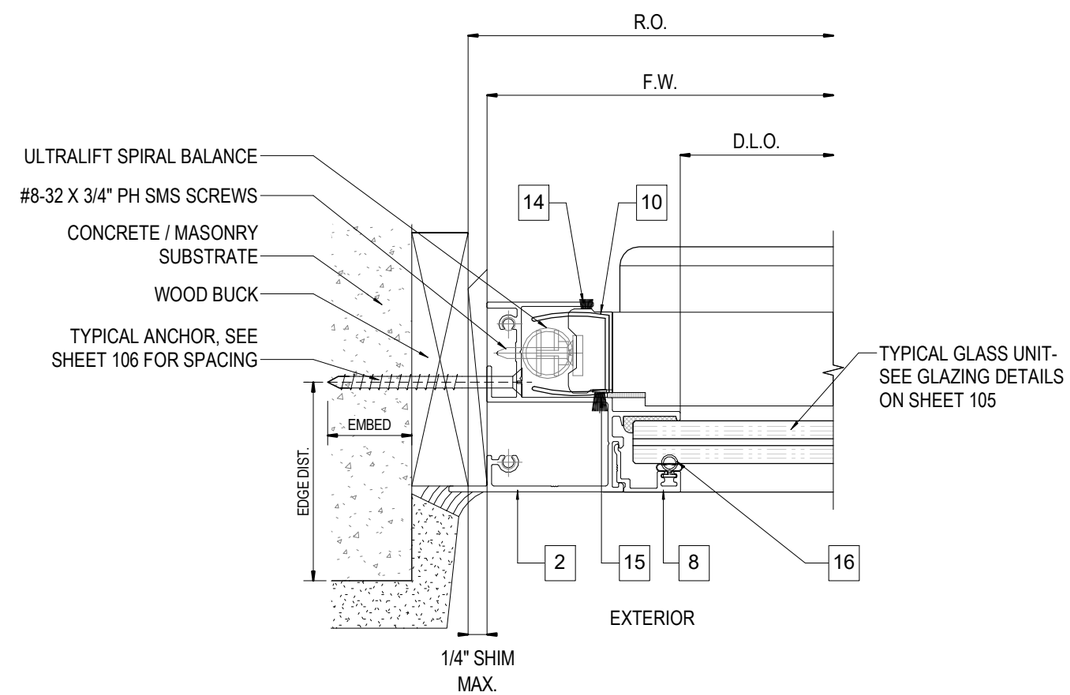

3 / 103 **TYPICAL JAMB DETAIL- UPPER VENT**

NOT TO SCALE

JAVAD AHMAD PE, inc
7875 NW 12th St., Suite 102
Doral, FL 33126
Ph: (305) 424-8001
support@ja-pe.com
CONSULTING • STRUCTURAL DESIGN • FACADES • BUILDING ENVELOPE • SYSTEM DESIGN • PRODUCT APPROVALS

drawing no. JA-2042-24 drawn by: BS
date: 12-19-24 check by: SA

REVISION

No.	DATE	BY	DESCRIPTION

ECO-NOVO SERIES: 175 SINGLE HUNG WINDOW SYSTEM
(LARGE AND SMALL MISSILE IMPACT RATED)

ECO window systems
ECO WINDOW SYSTEMS, LLC.
8502 N.W. 80th ST. MEDLEY, FL 33166
TEL. (305) 885-5299 FAX. (305) 885-5902

JAVAD AHMAD LICENSE No 70592 STATE OF FLORIDA PROFESSIONAL ENGINEER

SEALED: 12/19/2024

SECTIONAL DETAILS- VERTICAL

FL# 47213

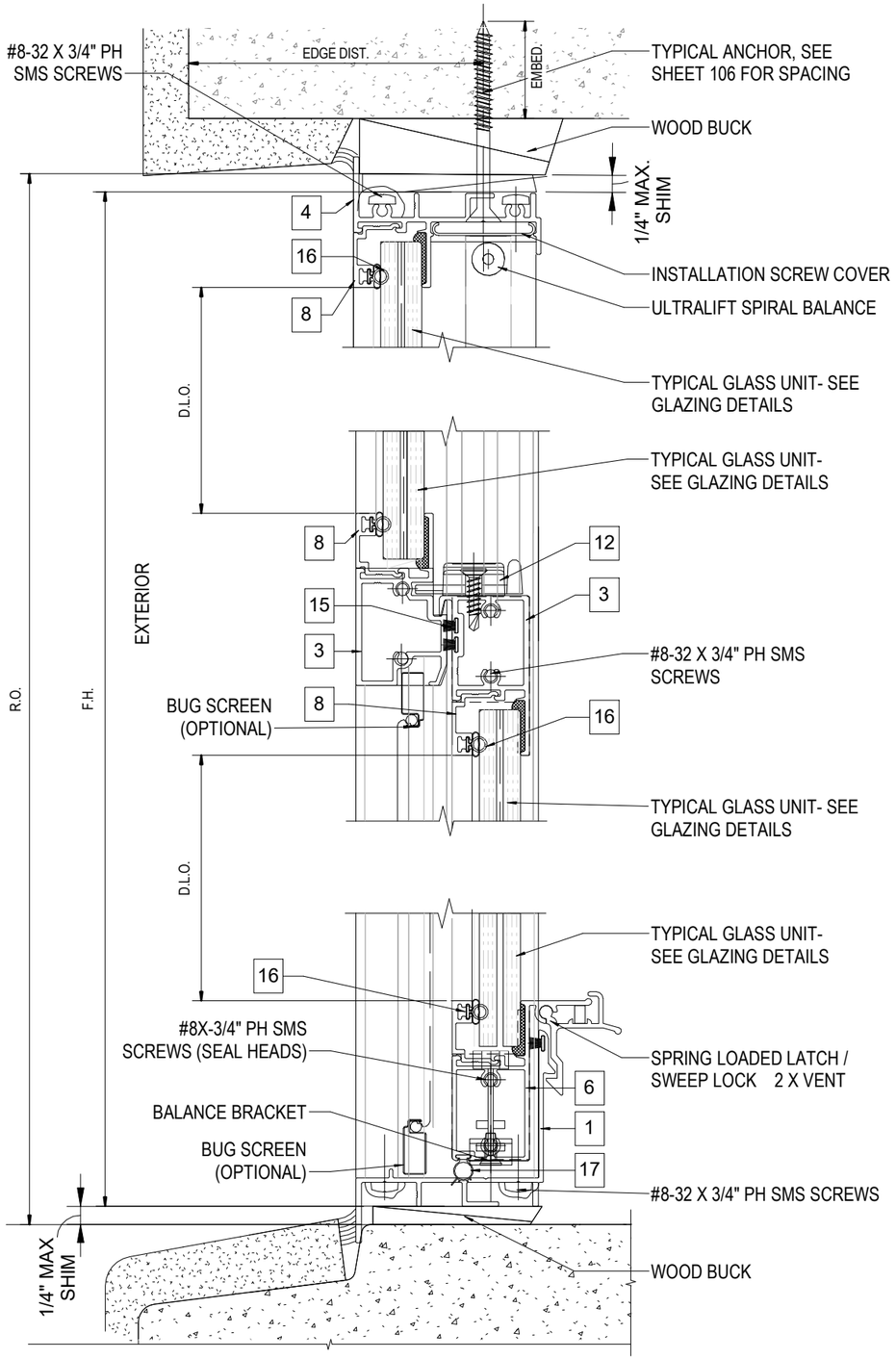

1/104 **TYPICAL HEADER DETAIL**
NOT TO SCALE

2/104 **TYPICAL INTERLOCK DETAIL**
NOT TO SCALE

3/104 **TYPICAL SILL DETAIL**
NOT TO SCALE

NOTE:
- EGRESS REQUIREMENTS TO BE REVIEWED BY BUILDING OFFICIAL.
- SEE CHART ON SHEET 106 FOR GLAZING OPTIONS AND ASD LOAD CAPACITIES.
- HARDWARE-
  1. SURFACE MOUNT METALLIC CAMLOCKS AT 8" FROM EACH END, FASTENED TO WINDOW FRAME WITH (2) #8 X 1" PH SMS SCREWS.
  2. SURFACE MOUNTED METALLIC SPRING LOADED BALANCE ATTACHED TO WINDOW FRAME WITH #10 X 1" PH SMS SCREWS
- LOCKS MUST BE ENGAGED DURING PERIODS OF HURRICANE WARNING.

NOTE: SEE SHEET 107 FOR ANCHOR SPACING

JAVAD AHMAD PE, inc
7875 NW 12th St., Suite 102
Doral, FL 33126
Ph: (305) 424-8001
support@ja-pe.com
CONSULTING • STRUCTURAL DESIGN • FACADES • BUILDING ENVELOPE • SYSTEM DESIGN • PRODUCT APPROVALS

drawing no. JA-2042-24 drawn by: BS
date: 12-19-24 check by: SA

REVISION

No.	DATE	BY	DESCRIPTION

ECO-NOVO SERIES: 175 SINGLE HUNG WINDOW SYSTEM
(LARGE AND SMALL MISSILE IMPACT RATED)

ECO window systems
ECO WINDOW SYSTEMS, LLC.
8502 N.W. 80th ST. MEDLEY, FL 33166
TEL. (305) 885-5299 FAX. (305) 885-5902

JAVAD AHMAD LICENSE No 70592 STATE OF FLORIDA PROFESSIONAL ENGINEER

SEALED: 12/19/2024

GLAZING DETAIL & LOADING CHART

FL# 47213

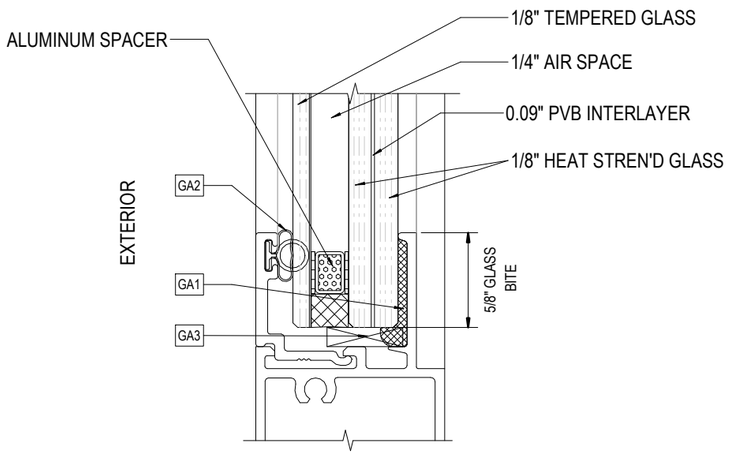

1/105 **TYPICAL INSULATED GLASS UNIT**
NOT TO SCALE

GLAZING UNIT PARTS

GA1- SEALANT- DOW 791 OR SCS 2000
GA2- BULB GASKET (PART NO. E202)
GA3- 1/2" X 4" X 1/8 THK. SILICONE SETTING BLOCK @ 1/4 POINTS

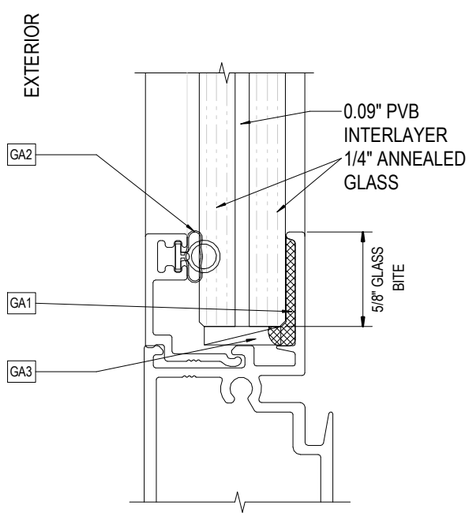

2/105 **TYPICAL LAMINATED GLASS UNIT**
NOT TO SCALE

LOAD CAPACITY CHART (ASD)

WINDOW DIMENSIONS		EQ. LITES CONFIGURATION		UNEQ. LITES CONFIGURATION	
WINDOW WIDTH (IN.)	WINDOW HEIGHT (IN.)	GL-1	GL-2	GL-1	GL-2
19 1/8	26 1/2	+ / - 70	+ / - 70	+ / - 70	+ / - 70
26 1/2		+ / - 70	+ / - 70	+ / - 70	+ / - 70
30		+ / - 70	+ / - 70	+ / - 70	+ / - 70
37		+ / - 70	+ / - 70	+ / - 70	+ / - 70
48		+ / - 70	+ / - 70	+ / - 70	+ / - 70
53 1/8		+ / - 70	+ / - 70	+ / - 70	+ / - 70
19 1/8	38 3/8	+ / - 70	+ / - 70	+ / - 70	+ / - 70
26 1/2		+ / - 70	+ / - 70	+ / - 70	+ / - 70
30		+ / - 70	+ / - 70	+ / - 70	+ / - 70
37		+ / - 70	+ / - 70	+ / - 70	+ / - 70
48		+ / - 70	+ / - 70	+ / - 70	+ / - 70
53 1/8		+ / - 70	+ / - 70	+ / - 70	+ / - 70
19 1/8	50 5/8	+ / - 70	+ / - 70	+ / - 70	+ / - 70
26 1/2		+ / - 70	+ / - 70	+ / - 70	+ / - 70
30		+ / - 70	+ / - 70	+ / - 70	+ / - 70
37		+ / - 70	+ / - 70	+ / - 70	+ / - 70
48		+ / - 70	+ / - 70	+ / - 70	+ / - 70
53 1/8		+ / - 70	+ / - 70	+ / - 70	+ / - 70
19 1/8	63	+ / - 70	+ / - 70	+ / - 70	+ / - 70
26 1/2		+ / - 70	+ / - 70	+ / - 70	+ / - 70
30		+ / - 70	+ / - 70	+ / - 70	+ / - 70
37		+ / - 70	+ / - 70	+ / - 70	+ / - 70
48		+ / - 70	+ / - 70	+ / - 70	+ / - 70
53 1/8		+ / - 70	+ / - 70	+ / - 70	+ / - 70
19 1/8	76	+ / - 70	+ / - 70	+ / - 70	+ / - 70
26 1/2		+ / - 70	+ / - 70	+ / - 70	+ / - 70
30		+ / - 70	+ / - 70	+ / - 70	+ / - 70
37		+ / - 70	+ / - 70	+ / - 70	+ / - 70
48		+ / - 70	+ / - 70	+ / - 70	+ / - 70
53 1/8		+ / - 70	+ / - 70	+ / - 70	+ / - 70

JAVAD AHMAD PE, inc
7875 NW 12th St., Suite 102
Doral, FL 33126
Ph: (305) 424-8001
support@ja-pe.com
CONSULTING • STRUCTURAL DESIGN • FACADES • BUILDING ENVELOPE • SYSTEM DESIGN • PRODUCT APPROVALS

drawing no. JA-2042-24 drawn by: BS
date: 12-19-24 check by: SA

REVISION

No.	DATE	BY	DESCRIPTION

ECO-NOVO SERIES: 175 SINGLE HUNG WINDOW SYSTEM
(LARGE AND SMALL MISSILE IMPACT RATED)

ECO window systems
ECO WINDOW SYSTEMS, LLC.
8502 N.W. 80th ST. MEDLEY, FL 33166
TEL. (305) 885-5299 FAX. (305) 885-5902

JAVAD AHMAD LICENSE No 70592 STATE OF FLORIDA PROFESSIONAL ENGINEER

SEALED: 12/19/2024

ANCHOR LAYOUT

FL# 47213

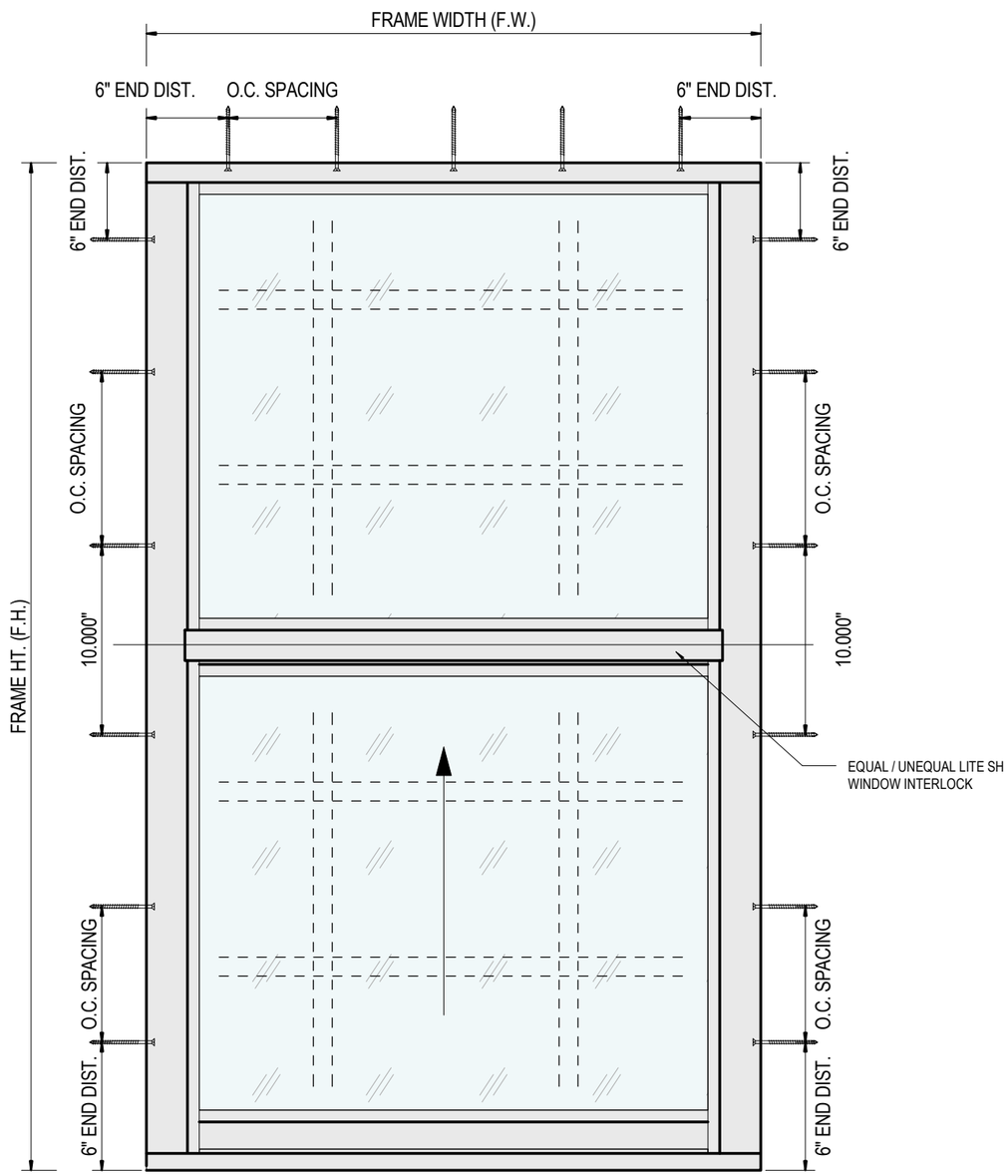

1
106

TYPICAL ANCHOR LAYOUT

NOT TO SCALE

TYPICAL ANCHOR TYPES
(APPLIES TO ALL ANCHORS GOING THROUGH THE DOOR FRAME):

TYPE A -1/4" DEWALT ULTRACON+ (Fu = 177,000 PSI, Fy = 155,000 PSI)

- INTO 2BY WOOD WITH 2" MIN PENETRATION, AND 1-1/4" MIN EDGE DISTANCE
- THRU 1BY WOOD INTO CONCRETE, OR HOLLOW/GROUT FILLED MASONRY WITH 1-3/4" EMBEDMENT, AND 2-1/2" MIN EDGE DISTANCE, AND 16" O.C. SPACING
- DIRECTLY INTO CONCRETE, OR HOLLOW/GROUT FILLED MASONRY WITH 1-3/4" EMBEDMENT, AND 2-1/2" MIN EDGE DISTANCE AND 16" O.C. SPACING
- THRU 1BY WOOD INTO CONCRETE, OR HOLLOW/GROUT FILLED MASONRY WITH 1-3/4" EMBEDMENT, AND 1" MIN EDGE DISTANCE, AND 10" O.C. SPACING
- DIRECTLY INTO CONCRETE, OR HOLLOW/GROUT FILLED MASONRY WITH 1-3/4" EMBEDMENT, AND 1" MIN EDGE DISTANCE AND 10" O.C. SPACING

TYPE B - #14 SMS OR SELF DRILLING SCREW (GRADE 5 MIN)

- INTO 1/8" MIN. THK. ALUMINUM / STEEL™® WITH (3) THREADS MIN. TO EXTEND BEYOND METAL THICKNESS, AND 3/4" MIN EDGE DISTANCE AND 16" O.C. SPACING
- INTO APPROVED MULLIONS MIN. 1/8" THK. WITH (3) THREADS MIN. TO EXTEND BEYOND METAL THICKNESS, AND 3/4" MIN EDGE DISTANCE AND 16" O.C. SPACING

ANCHOR / SUBSTRATE NOTES:

- WOOD AT HEAD OR JAMBS IS SOUTHERN YELLOW PINE #2 (SG=0.55 MIN.)
- CONCRETE AT HEAD OR JAMBS f'c= 3000 PSI
- C-90 HOLLOW/GROUT FILLED MASONRY UNITS AT JAMBS f'M= 2000 PSI
- STEEL (1/8" THK., A36 MIN) AT HEAD OR JAMBS
- ALUMINUM (1/8" THK., 6063-T6 MIN) AT HEAD OR JAMBS
- STEEL IN CONTACT WITH ALUMINUM TO BE PAINTED

NOTE:
THE WOOD BUCKS, CONCRETE AND METAL STRUCTURE SHOWN ON THIS SHEET SHALL BE DESIGNED BY OTHERS AND ARE NOT PART OF THIS APPROVAL. THEY MUST BE CAPABLE OF WITHSTANDING THE LOADS IMPOSED BY THE GLAZING SYSTEM AND TRANSFERRING THEM TO THE BUILDING STRUCTURE.

SEALANTS:
ALL JOINTS AND FRAME CONNECTIONS SHALL BE SEALED WITH ALUMINUM COLOR SEALANT.

ANCHORAGE DETAILS

SEE ANCHORAGE DETAILS SHOWN ON SHEET 103, 104 AND 107 FOR APPLICABLE SUBSTRATE.

JAVAD AHMAD PE, inc
7875 NW 12th St., Suite 102
Doral, FL 33126
Ph: (305) 424-8001
support@ja-pe.com
CONSULTING • STRUCTURAL DESIGN • FACADES • BUILDING ENVELOPE • SYSTEM DESIGN • PRODUCT APPROVALS

drawing no. JA-2042-24 drawn by: BS
date: 12-19-24 check by: SA

REVISION

No.	DATE	BY	DESCRIPTION

ECO-NOVO SERIES: 175 SINGLE HUNG WINDOW SYSTEM
(LARGE AND SMALL MISSILE IMPACT RATED)

ECO window systems
ECO WINDOW SYSTEMS, LLC.
8502 N.W. 80th ST. MEDLEY, FL 33166
TEL. (305) 885-5299 FAX. (305) 885-5902

JAVAD AHMAD LICENSE No 70592 STATE OF FLORIDA PROFESSIONAL ENGINEER

SEALED: 12/19/2024

TYPICAL ANCHORAGE DETAILS

FL# 47213

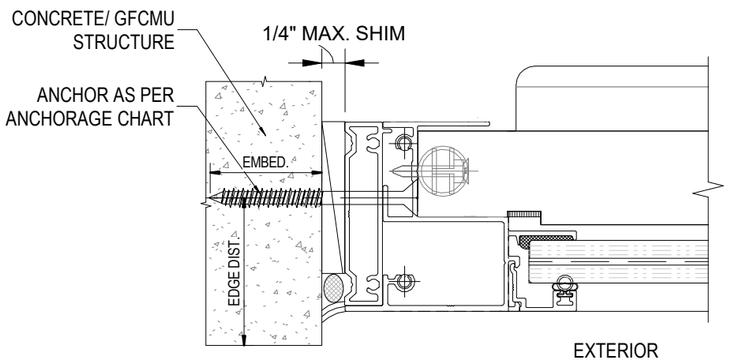

1/107 **ANCHORAGE DIRECTLY INTO CONCRETE- WITH FLUSH ADAPTER**
NOT TO SCALE

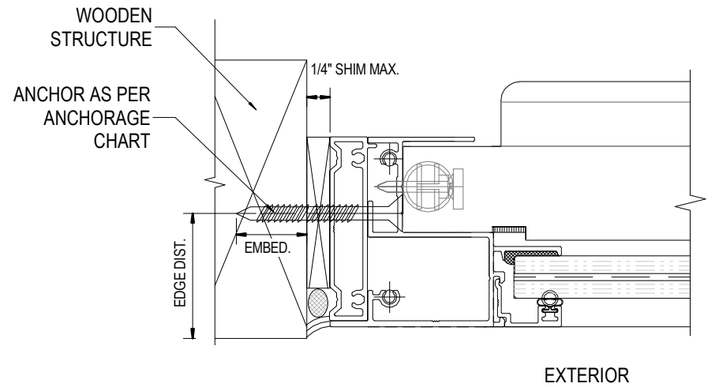

2/107 **ANCHORAGE INTO WOODEN STRUCTURE-WITH FLUSH ADAPTER**
NOT TO SCALE

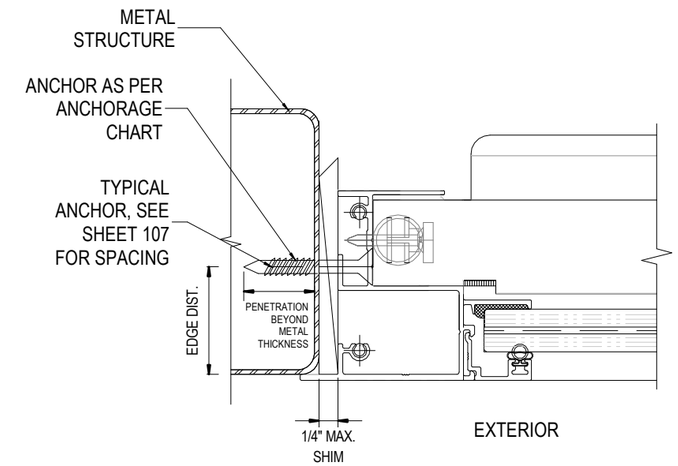

5/107 **ANCHORAGE INTO METAL STRUCTURE**
NOT TO SCALE

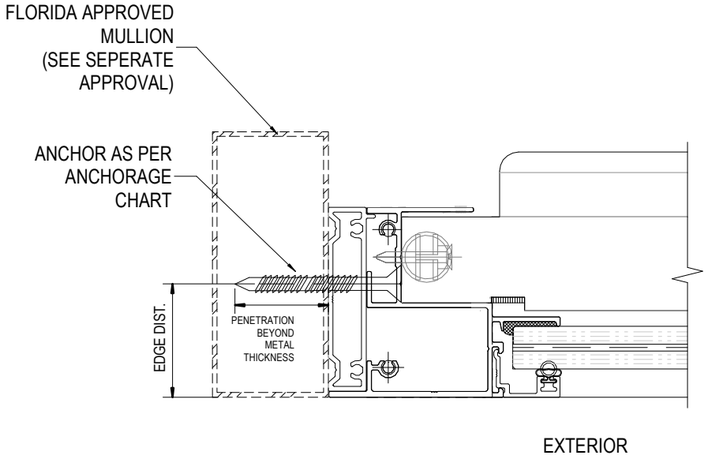

3/107 **ANCHORAGE INTO APPROVED MULLION- WITH FLUSH ADAPTER**
NOT TO SCALE

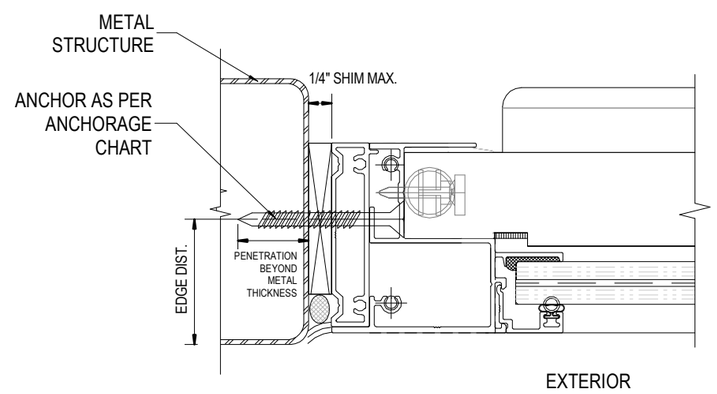

4/107 **ANCHORAGE INTO METAL STRUCTURE-WITH FLUSH ADAPTER**
NOT TO SCALE

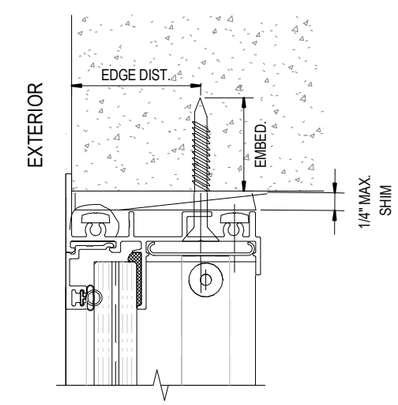

6/107 **HEADER ANCHORAGE DIRECTLY INTO CONCRETE**
NOT TO SCALE

NOTE:

- FOR MORE ANCHORAGE DETAILS, SEE SECTIONAL DETAILS SHOWN ON SHEET 103 AND 104.
- THE MIN. ANCHOR EMBEDMENT, SPACING, EDGE DISTANE AND SUBSTRATE SHALL BE AS PER SHEET 106

JAVAD AHMAD PE, inc
7875 NW 12th St., Suite 102
Doral, FL 33126
Ph: (305) 424-8001
support@ja-pe.com
CONSULTING • STRUCTURAL DESIGN • FACADES • BUILDING ENVELOPE • SYSTEM DESIGN • PRODUCT APPROVALS

drawing no.	JA-2042-24	drawn by:	BS
date:	12-19-24	check by:	SA

REVISION

No.	DATE	BY	DESCRIPTION

ECO-NOVO SERIES: 175 SINGLE HUNG WINDOW SYSTEM
(LARGE AND SMALL MISSILE IMPACT RATED)

ECO window systems
ECO WINDOW SYSTEMS, LLC.
8602 N.W. 80th ST. MEDLEY, FL 33166
TEL. (305) 885-5299 FAX. (305) 885-5902

JAVAD AHMAD LICENSE No 70592 STATE OF FLORIDA PROFESSIONAL ENGINEER

SEALED: 12/19/2024

PARTS LIST

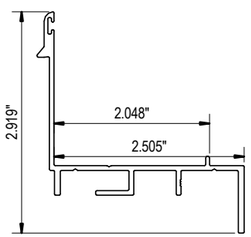

1. SILL

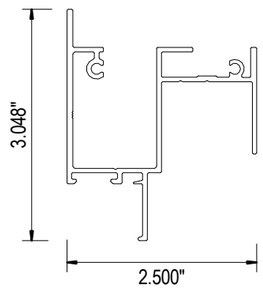

2. JAMB

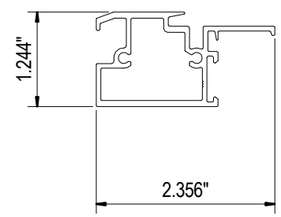

3. MEETING RAIL

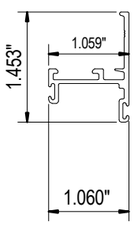

4. VENT JAMB RAIL

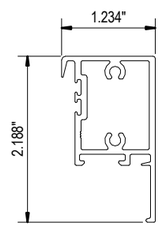

5. VENT TOP RAIL

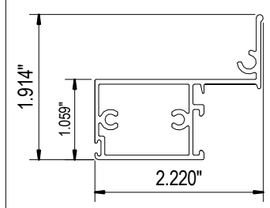

6. VENT BOTTOM RAIL

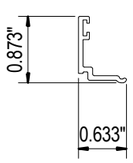

7. INS-LAMINATED GLASS STOP

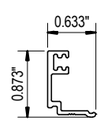

8. LAMINATED GLASS STOP

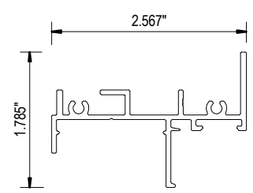

9. FRAME HEAD

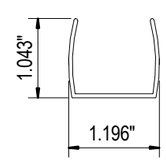

10. SASH STOP

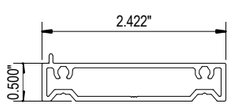

11. FLUSH ADAPTER

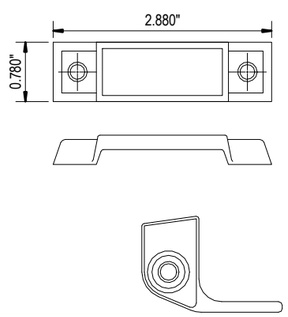

12. SWEEP LOCK

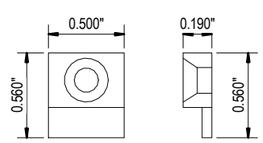

13. FACE GUIDE

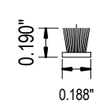

14. WEATHER STRIP

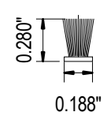

15. WEATHER STRIP

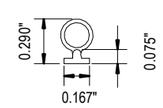

16. BULB GASKET

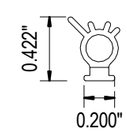

17. BULB GASKET

BILL OF MATERIAL

FL# 47213

ITEM#	PART#	REQD.	LENGTH	DESCRIPTION	MATERIAL
1	E171	1	AS REQD.	SILL	ALLOY 6063-T6
2	E272	1	AS REQD.	JAMB (SH)	ALLOY 6063-T6
3	E273	1	AS REQD.	MEETING RAIL	ALLOY 6063-T6
4	E274	1	AS REQD.	VENT JAMB RAIL	ALLOY 6063-T6
5	E172	1	AS REQD.	VENT TOP RAIL	ALLOY 6063-T6
6	E276	1	AS REQD.	VENT BOTTOM RAIL	ALLOY 6063-T6
7	E278	1	AS REQD.	INS-LAMINATED GLASS STOP	ALLOY 6063-T6
8	E279	1	AS REQD.	LAMINATED GLASS STOP	ALLOY 6063-T6
9	E371	1	AS REQD.	FRAME HEAD	CELCON,BRASS WHEELS,STAINLESS STEEL SHAFT
10	E281	1	AS REQD.	SASH STOP	ALLOY 6063-T6
11	E372	AS REQD.	AS REQD.	FLUSH ADAPTER	ALLOY 6063-T6
12	A274	AS REQD.	AS REQD.	SWEEP LOCK	DIE CAST
13	A275	AS REQD.	AS REQD.	FACE GUIDE	NYLON
14	A281	AS REQD.	AS REQD.	WEATHER STRIP	WOVEN PILE+ POLYP.BACKING
15	A282	AS REQD.	AS REQD.	WEATHER STRIP	WOVEN PILE+ POLYP.BACKING
16	A283	AS REQD.	AS REQD.	BULB GASKET	TPE & POLYPROPYLENE
17	A284	AS REQD.	AS REQD.	BULB GASKET	TPE & POLYPROPYLENE

JAVAD AHMAD PE, inc
7875 NW 12th St., Suite 102
Doral, FL 33126
Ph: (305) 424-8001
support@ja-pe.com

CONSULTING • STRUCTURAL DESIGN • FACADES • BUILDING ENVELOPE • SYSTEM DESIGN • PRODUCT APPROVALS

drawing no. JA-2042-24 drawn by: BS
date: 12-19-24 check by: SA

REVISION

No.	DATE	BY	DESCRIPTION

ECO-NOVO SERIES: 175 SINGLE HUNG WINDOW SYSTEM
(LARGE AND SMALL MISSILE IMPACT RATED)

ECO window systems
ECO WINDOW SYSTEMS, LLC.
8502 N.W. 80th ST. MEDLEY, FL 33166
TEL. (305) 885-5299 FAX. (305) 885-5902

JAVAD AHMAD LICENSE No 70592 STATE OF FLORIDA PROFESSIONAL ENGINEER

SEALED: 12/19/2024

CORNER ASSEMBLY DETAIL

FL# 47213

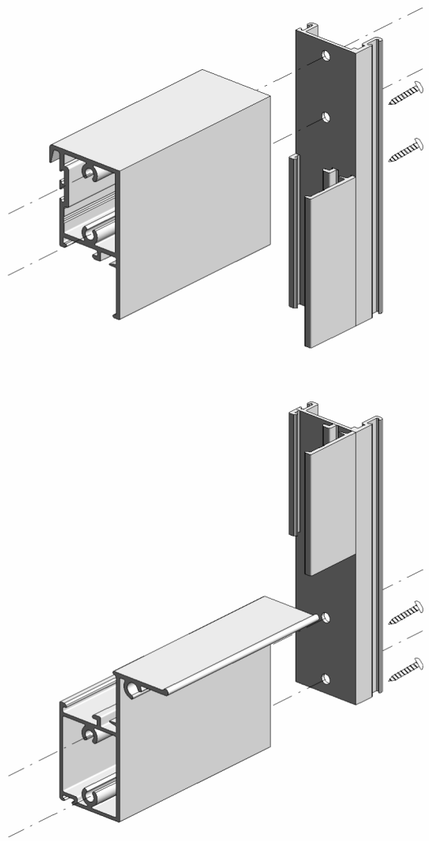

VENT CORNER ASSEMBLY

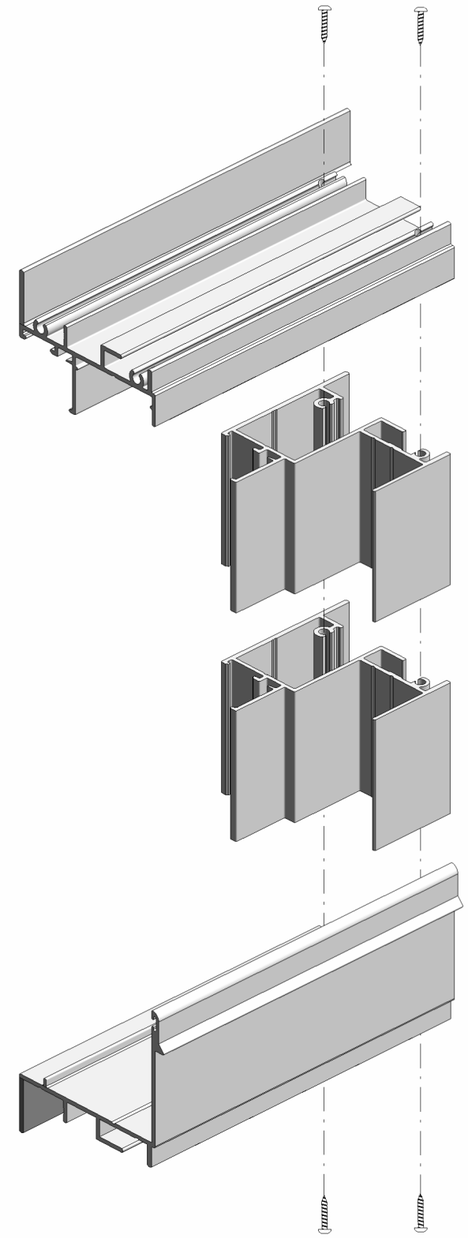

FRAME CORNERS ASSEMBLY

JAVAD AHMAD PE, inc
7875 NW 12th St., Suite 102
Doral, FL 33126
Ph: (305) 424-8001
support@ja-pe.com
CONSULTING • STRUCTURAL DESIGN • FACADES • BUILDING ENVELOPE • SYSTEM DESIGN • PRODUCT APPROVALS

drawing no.	JA-2042-24	drawn by:	BS
date:	12-19-24	check by:	SA

REVISION

No.	DATE	BY	DESCRIPTION

ECO-NOVO SERIES: 175 SINGLE HUNG WINDOW SYSTEM
(LARGE AND SMALL MISSILE IMPACT RATED)

ECO window systems
ECO WINDOW SYSTEMS, LLC.
8602 N.W. 80th ST. MEDLEY, FL 33166
TEL. (305) 885-5299 FAX. (305) 885-5902

JAVAD AHMAD
LICENSE
No 70592
STATE OF FLORIDA
PROFESSIONAL ENGINEER

SEALED: 12/19/2024